AC STANDARD BODY WITH EXTENDED SENSING DISTANCE PROXIMITY SWITCH

M12		M18		M30	
●	○	●	○	●	○
4 mm	8 mm	8 mm	16 mm	16 mm	25 mm
nickel plated brass		nickel plated brass		nickel plated brass	
●		●		●	

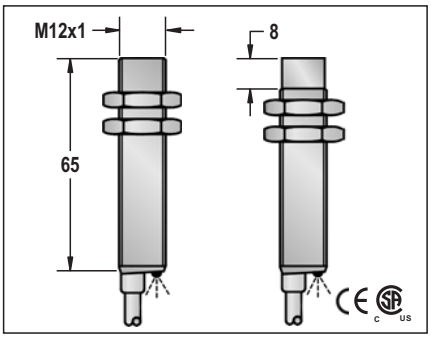

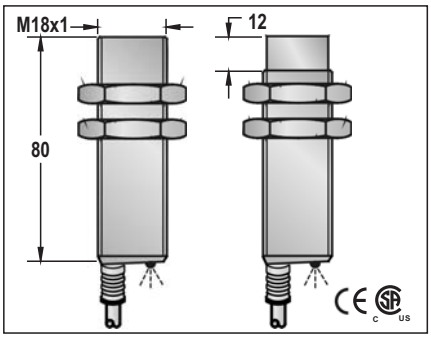

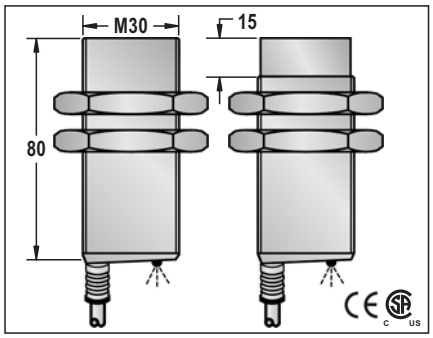

M12		M18		M30	
20-250VAC		20-250VAC		20-250VAC	
-		-		-	
<1.8mA		<1.8mA		<1.8mA	
400mA		400mA		400mA	
1.8mA		1.8mA		1.8mA	
5A(20ms)		5A(20ms)		5A(20ms)	
5mA		5mA		5mA	
<8VAC AT 400MA		<8VAC AT 400MA		<8VAC AT 400MA	
<25HZ		<25HZ		<25HZ	
10ms/10ms		10ms/10ms		10ms/10ms	
<15%		<15%		<15%	
<1.0%(Sr)		<1.0%(Sr)		<1.0%(Sr)	
IP67		IP67		IP67	
-25°C - +70°C		-25°C - +70°C		-25°C - +70°C	
<10%(Sr)		<10%(Sr)		<10%(Sr)	
-		-		-	
-		-		-	
-		-		-	
RFI>3V/m / EFT>1KV / ESD>4KV (contact)		RFI>3V/m / EFT>1KV / ESD>4KV (contact)		RFI>3V/m / EFT>1KV / ESD>4KV (contact)	
IEC 60947-5-2,Part 7.4.1 / IEC 60947-5-2,Part 7.4.2		IEC 60947-5-2,Part 7.4.1 / IEC 60947-5-2,Part 7.4.2		IEC 60947-5-2,Part 7.4.1 / IEC 60947-5-2,Part 7.4.2	
POM	PBT	PBT		PBT	
ECM1-1204A-A3L2	11	ECM1-1808A-A3L2	11	ECM1-3016A-A3L2	11
ECM1-1204A-B3L2	12	ECM1-1808A-B3L2	12	ECM1-3016A-B3L2	12
4ϕ3x0.34		5.0ϕ44x0.1		5.8ϕ3x0.5	
Approx.77 g	Approx.76 g	Approx.161 g	Approx.160 g	Approx.247 g	Approx.237 g